MARTIN LUBRICANTS

TECHNICAL DATA
Martin Plastics Division

5 QUART BOTTLE (163.2oz.)

product specification sheet | REV: 03.27.2020

PALLETIZED QUANTITIES:

Per Pallet: 260
Per Layer: 65

Layers Per Pallet: 4
Units TL: 11,440
Pallets TL: 44

BOTTLE DIMENSIONS:

8.174wX4.500dX13.39h

NECK FINISH:

38MM/SP400

PRODUCT SPECS:

Material: HDPE
Capacity: 128 oz.
View Stripe: No
Gram Weight: 185

FEATURE

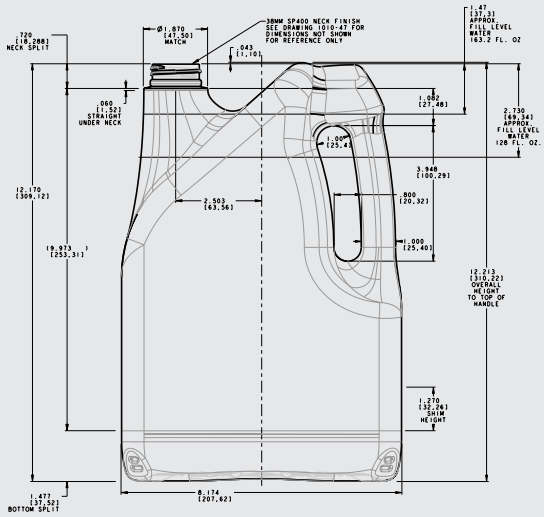

COLORS OPTIONS:

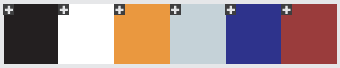

PALLET DIMENSIONS & WEIGHTS:

Pallet Dims: 56wX44dX52h
Wood: 425 lbs.
Plastic: 392-400 lbs.

LABELING:

Die Line Template Available
Pressure Sensitive Label

Stocked Colors: Black, White, Orange, Silver, Dark Blue and Red

CUSTOMIZE IT! CUSTOM COLORS AVAILABLE CONTACT US AT PLASTICCONTAINERS@MARTINLUBRICANTS.COM

Handling conditions vary a lot from customer to customer. Tests are recommended thought-out the process of denesting, filling, conveying palletization, warehousing, transportation and utilization by intermediaries and users. Specifications can change without notice. Please contact your Martin representative to confirm this data.