SynGard™ SYNTHETIC LUBRICANTS

PIONEERING PREMIUM PROTECTION & PERFORMANCE

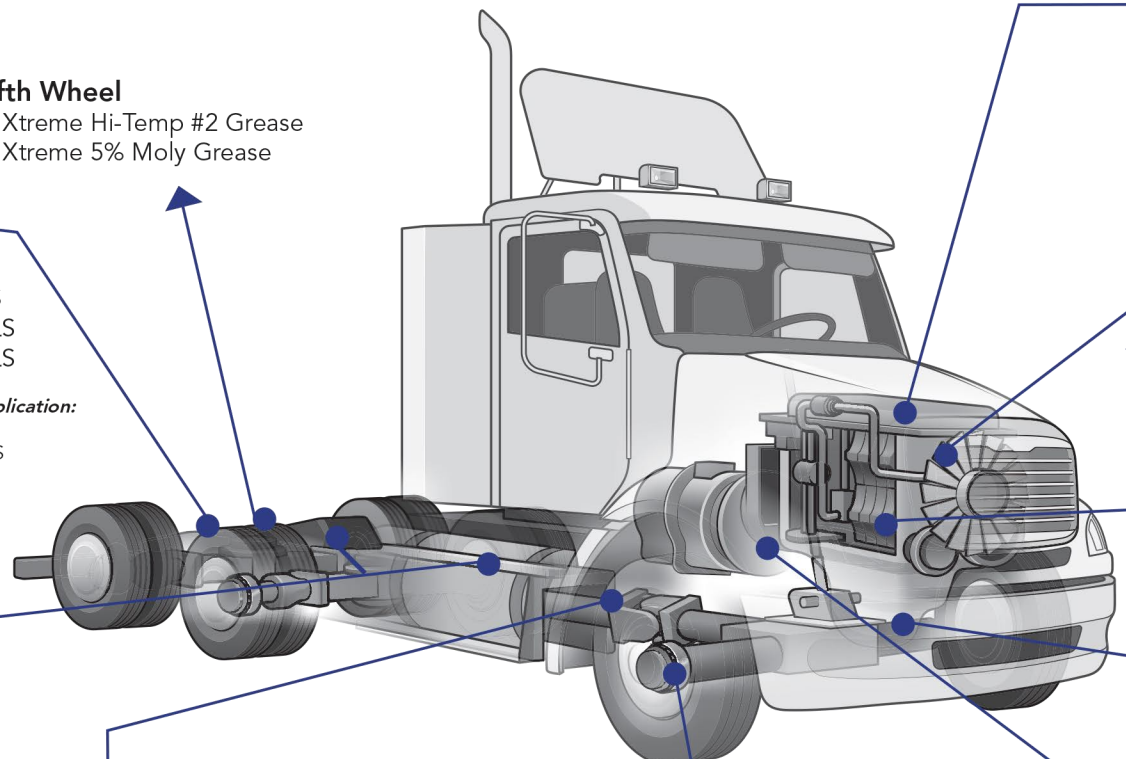

Fifth Wheel
- Xtreme Hi-Temp #2 Grease
- Xtreme 5% Moly Grease

Rear Axle
- SynGard SAE 75W-90 GL-5 LS
- SynGard SAE 75W-140 GL-5 LS
- SynGard SAE 80W-140 GL-5 LS

Other brands available for this application:
- Unimark SAE 80W-90 GL-5 LS
- Unimark SAE 85W-140 GL-5 LS

Engine Crankcase
- SynGard Fleet SAE 0W-40 CJ-4
- SynGard Fleet SAE 5W-40 CJ-4

Other brands available for this application:
- Xtreme Fleet Synthetic Blend SAE 10W-30 CJ-4
- Xtreme Fleet Synthetic Blend SAE 15W-40 CJ-4
- Xtreme Fleet Heavy-Duty SAE 15W-40 CI-4 Plus

Radiator
- Gard Extended Life HD Anti-Freeze Coolant
- Gard Extended Life HD Anti-Freeze Coolant 50/50

Manual Steering Gear
- Xtreme Hi-Temp #2 Grease
- Xtreme 5% Moly Grease

Grease Points
- Xtreme Hi-Temp #2 Grease
- Xtreme 5% Moly Grease

Driveline Universal Joints
- Xtreme Hi-Temp #2 Grease
- Xtreme 5% Moly Grease

Transmission
- SynGard Fleet Heavy-Duty ATF
- SynGard Heavy-Duty SAE 50 Transmission Fluid

Axle Bearings
- Xtreme Hi-Temp #2 Grease
- Xtreme 5% Moly Grease

Clutch Throw Out Bearings
- Xtreme Hi-Temp #2 Grease
- Xtreme 5% Moly Grease

MARTIN LUBRICANTS

www.SynGardOil.com | www.MartinLubricants.com
484 E. 6th Street | Smackover, Arkansas 71762 | 800.725.3066

Notice: Check your owner's manual for precise lubrication recommendations.